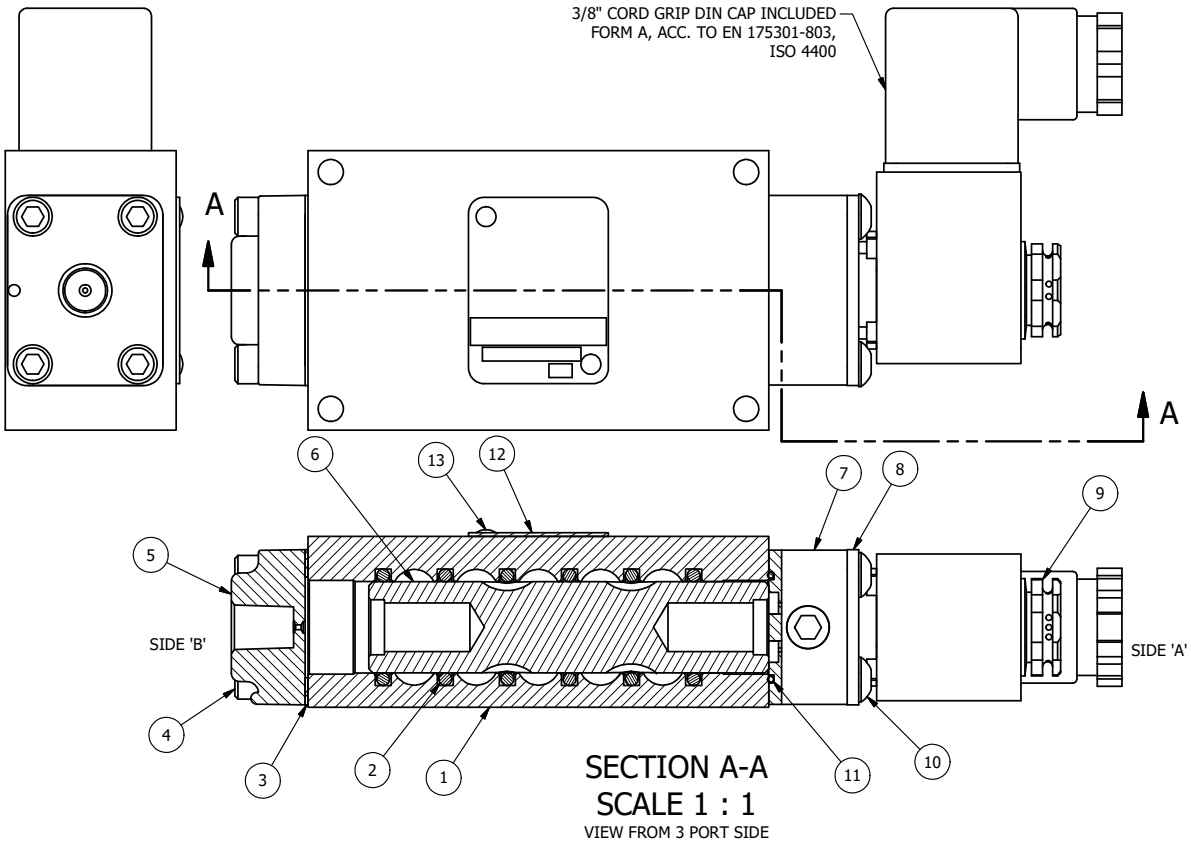


SECTION A-A
SCALE 1 : 1
VIEW FROM 3 PORT SIDE

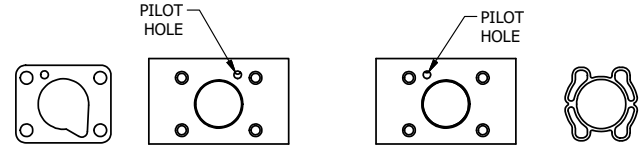


POSITION GASKET TO SEAL PILOT HOLE
SIDE 'B' ONLY.

ALIGN PILOT AND SLOT IN ADAPTOR
WITH GASKET IN BETWEEN SIDE 'A' ONLY
FOR EXTERNAL PILOT OPERATION - ROTATE ADAPTOR
180 DEGREES. REMOVE 1/8" NPTF PLUG AND
SUPPLY 50-150 PSI TO 1/8" NPTF PILOT PORT IN ADAPTOR.

| FLG | QTY | PART NO | DESCRIPTION |
|---|---|---|---|
| 13 | 2 | V-212 | SCREW, #2 X 3/16 DRIVE, TYPE U, OVAL HEAD, STAINLESS STEEL |
| 12 | 1 | AN-115 | NAMEPLATE, BLANK, FOR HE,KE,KD,RR,D,CR,PP,SR,SS VALVES |
| 11 | 1 | EMG3 | GASKET - END MOUNT SOLENOID, BUNA-N, 1/4" & 3/8" VALVES |
| 10 | 4 | V-584 | SCREW, 10-24 X 1, BUTTON HEAD SOCKET CAP WITH MICROSPHERE APPLIED TO THREADS. |
| 9 | 1 | V-562 | NUT, SOLENOID, SIDE EXHAUST |
| 8 | 1 | SEC3-7 | PLATE, RE-INFORCEMENT, SOLENOID, STAMPED, 304 STAINLESS |
| 7 | 1 | V-564 | SYSTEM 8 INTRINSICALLY SAFE SOLENOID OPERATOR. |
| 6 | 1 | S3R | SPOOL - SOLID, STANDARD, 2 POS, CLSD CTR, 1/4" & 3/8" VALVE |
| 5 | 1 | PEC3 | END CAP, PILOT, 380 AL, 1/4" & 3/8" VALVE |
| 4 | 4 | V-38 | SCREW, 10-24 X 3/4, SOCKET HEAD CAP |
| 3 | 1 | ECG3 | GASKET - END CAP, 1/4" & 3/8" VALVE |
| 2 | 6 | V-39 | O-RING, VITON, STD BODY, 1/4" & 3/8" VALVES |
| 1 | 1 | B2-1E | BODY - SOLID, BUTTON BLEEDER, ANODIZED, 1/4" SIDE PORT VALVE |

NOTES:
1) ALWAYS GIVE VALVE MODEL AND PART NUMBER WHEN ORDERING PARTS.

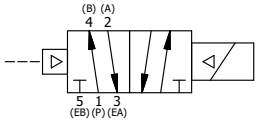


LIMITS ON DIMENSIONS UNLESS OTHERWISE SPECIFIED
2-PL DECIMAL ± .01
3-PL DECIMAL ± .005
FRACTIONAL ± 1/64
ANGULAR ± 1/2'

**AAA PRODUCTS INTERNATIONAL**
7114 Harry Hines Blvd
Dallas, TX 75235

| | | | |
|---|---|---|---|
| DRAWN: RMcKenna | DATE: 3/21/2016 | CHECKED: KWaite | DATE: 3/21/2016 |
| SCALE: 1 : 1 | SHEET: 1 OF 1 | RELEASED: HWomack | DATE: 3/21/2016 |

TITLE:
1/4" SIDE PORT, SNGL SOL, 2 POS,
FRICTION POS, PILOT RTRN,
INTR SAFE, 24VDC, SIDE VENT

PART NO.: ESR2AC 24VDC

REV.:

THE INFORMATION CONTAINED WITHIN THIS DOCUMENT IS PROPRIETARY TO AAA PRODUCTS AND MAY NOT BE DISCLOSED WITHOUT PRIOR WRITTEN CONSENT

D:\Engineering\Product\Valve\Assembly\Standard\ESR\DWG\ESR2AC-24VDC.dw